VEZENI

RANDOLPH PRO COLLECTION

36-Inch Gas Range VRN3601-PRO



COOKTOP FEATURES

Total Burners	6 Brass Burners
Front Left	18,000 BTU
Rear Left	9,000 BTU
Front Right	18,000 BTU
Rear Right	9,000 BTU
Front Center	9,000 BTU
Rear Center	17,000 BTU

OVEN FEATURES

Oven Cavity	1
Oven Capacity	5.2 CU. FT.
Primary Oven BTU	22,000 BTU
Broil oven BTU	16,500 BTU
Oven Modes	Broil, Bake, Convection Bake,
Cleaning System	SteamClean
Oven Temp Range (F)	150° – 500 °

PRODUCT FEATURES

- **Six German Brass Burners (Up to 18,000 BTU):** Powerful performance with precise heat control.
- **5.2 Cu. Ft. Convection Oven:** Spacious oven cavity with even heat distribution.
- **Infrared Broiler:** High-intensity broiling for superior searing and finishing.
- **Continuous Cast Iron Grates:** Durable design for smooth cookware movement.
- **Exclusive Zinc Alloy Knobs with Blue Lighting:** Premium controls with illuminated accents.
- **Black Enamel Cooktop:** Durable, easy-to-clean cooking surface.
- **Carbon Fiber Handle:** Modern design with exceptional durability.
- **Soft-Close Oven Door with Removable Triple-Pane Glass:** Smooth operation with enhanced safety.
- **Single Convection Fan:** Ensures even heat circulation for consistent baking and roasting.
- **Blue Enamel Oven Interior:** Durable finish designed for easy maintenance.
- **Five Rack Positions:** Flexible oven configuration to accommodate cookware of all sizes.
- **SteamClean System:** Simplifies routine oven cleaning.
- **Included Accessories:** Telescopic guides with 2 racks, 1 enamel broiler pan.

SAFETY FEATURES

- Appliance gas safety device
- Cooktop auto-reignition system
- Child safety lock
- Appliance anti-tip bracket

PRODUCT SPECIFICATIONS

- Model No.: **VRN3601 - PRO**
- Product Dimensions: **36"W × 27.375"D × 36"H (depth without handle)**
- Package Dimensions: **40.1"W × 32.2"D × 45.35"H**
- Product Weight**: 361 lbs**
- Electrical Supply: **120V / 60Hz**
- Electrical Service: **15-amp dedicated circuit**
- Gas Supply: **NG (Natural Gas) / LP conversion kit included**
- Plug: **Molded electrical plug, Type B (NEMA 5-15)**
- Distance to Vent Hood: **30" min / 36" max**
- Gas Connection**: ½" gas fitting (bottom right)**

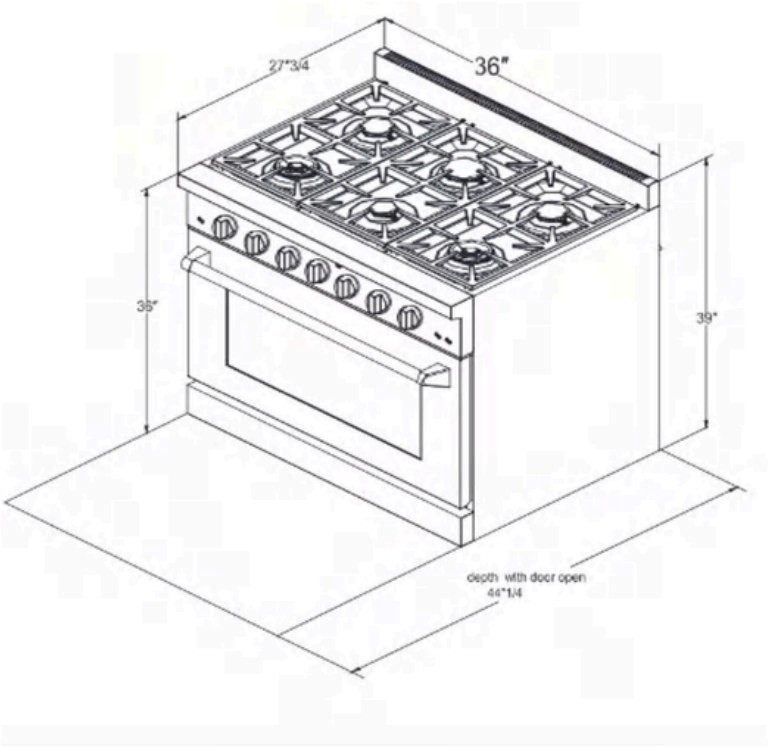

DIMENSIONS & CLEARANCES

The maximum depth of cabinets installed above the cooking surface should be 13" (330 mm), or as specified by the manufacturer and tested by the certification agency.

